PROJECT REFERENCE NO.	SHEET NO.
W-5145	PM-3
R/W SHEET NO.	

NORTH CAROLINA PROFESSIONAL SEAL 26930 ENGINEER GREG S. DAVIS

DocuSigned by: Greg S. Davis 33D478B5FD78F4A0... 11/18/2015

DIVISION DESIGN / CONSTRUCT ENGINEER

DOCUMENT NOT CONSIDERED FINAL UNLESS ALL SIGNATURES COMPLETED

PAVEMENT MARKING LEGEND

---CRYSTAL / RED PAVEMENT MARKER

---YELLOW / YELLOW PAVEMENT MARKER

---CRYSTAL / CRYSTAL PAVEMENT MARKER

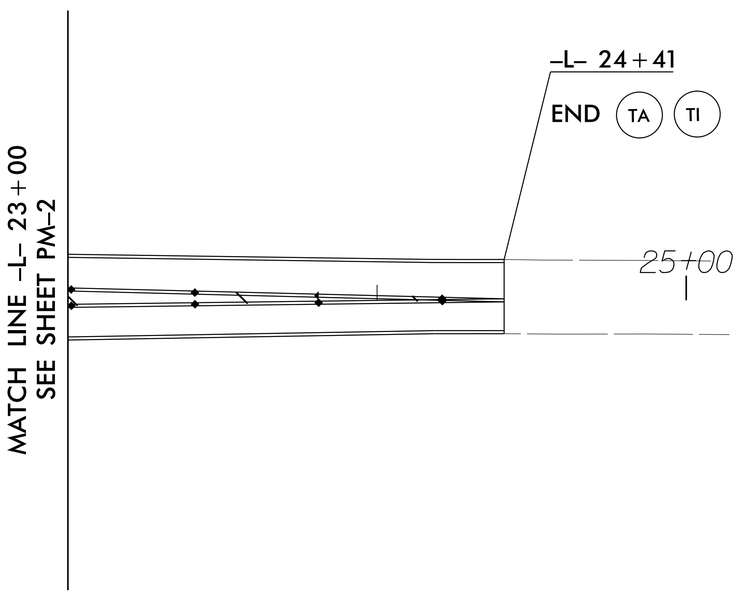

PAVEMENT MARKING LINES

TA -	THERMOPLASTIC	(4"	WHITE, 90 MILS)	EDGE LINE
TD -	THERMOPLASTIC	(4"	WHITE, 120 MILS)	3' X 9' SP MINISKIP
TE -	THERMOPLASTIC	(4"	WHITE, 120 MILS)	SOLID LANE LINE
TF -	THERMOPLASTIC	(4"	YELLOW, 120 MILS)	10' SKIP
TH -	THERMOPLASTIC	(4"	YELLOW, 120 MILS)	SINGLE CENTERLINE
TI -	THERMOPLASTIC	(4"	YELLOW, 120 MILS)	DOUBLE CENTERLINE
TP -	THERMOPLASTIC	(8"	YELLOW, 90 MILS)	DIAGONAL

PAVEMENT MARKING SYMBOLS

UA -	THERMOPLASTIC	(LEFT TURN ARROW, 90 MILS)
UC -	THERMOPLASTIC	(STRAIGHT ARROW, 90 MILS)

50' 0 50' 100'

REVISIONS

8/17/99

17-NOV-2015 16:47
z:\projects\p5010\ue5010pr_1614barnes_bridge_rd\psh\PMP\W-5145_pmp_3.dgn
gsdavis
A1 D8(AD) 27/0410